Technical data sheet

External corner, for device installation trunking Rapid 45-2 type GKH-53100
Item number: 6113045



Wall and ceiling trunking, halogen-free, consisting of base and cover for mounting directly on the wall.
During installation, ensure that only halogen-free accessories and fastening materials are used.

PC/ABS Polycarbonate/Acrylnitrile-butadiene-styrene

Master data

Item number	6113045
Type	GKH-AS53100RW
Description 1	External corner
Description 2	rigid form
Manufacturer	OBO
Dimension	189x189x100
Colour	Pure white; RAL 9010
Material	Polycarbonate/Acrylnitrile-butadiene-styrene
Smallest sales unit	1
Unit of quantity	Piece
Weight	40.4 kg
Weight unit	kg/100 pc.
CO2 Footprint (GWP) Cradle-to-Gate	3,5129 kg CO2e / 1 Piece

Technical data sheet

External corner, for device installation trunking Rapid 45-2 type GKH-53100
Item number: 6113045

Dimensions

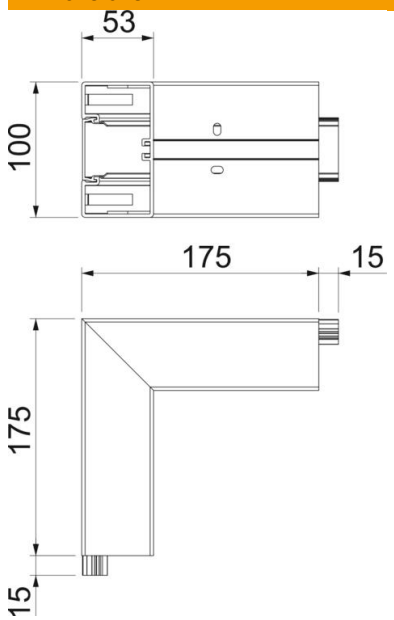

Length	175 mm
Width	100 mm
Height	53 mm

Technical data

Number of covers	1
for duct width	100 mm
for trunking height	53 mm
Halogen-free	yes
Cable retaining clip	no
Duct connector	no
Cover width	45 mm
Cover width 2	0 mm
Cover width 3	0 mm
ROHS-conformant	yes
Protection rating	IP40
Protection rating IK code	IK08
Symmetrical	yes
Permitted temperature range, max.	60 °C
Permitted temperature range, min.	-15 °C